C Trim, ThermoBalance I with Lever Handle

06061XX0

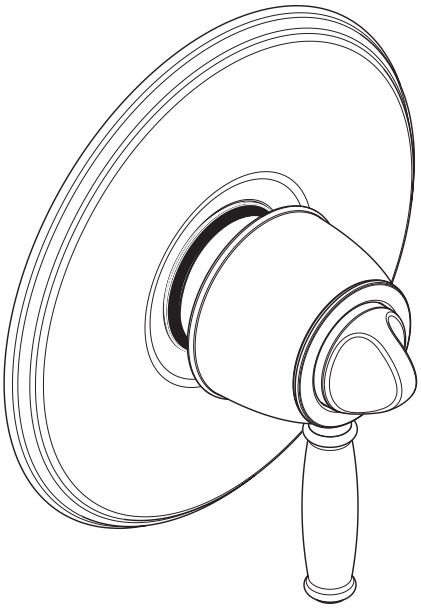

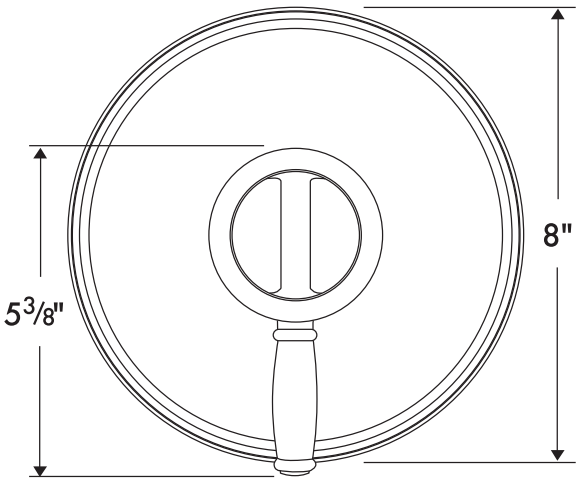

Product Features

- Matches Swing C, Tango C, Limbo C
- Thermostatic temperature control and volume control in one unit
- Controls one function
- 100° Safety stop
- High temperature limit stop may be reset to comply with local plumbing codes
- Flow rate 9.5 gpm @ 44 psi when used with rough 06622 or 06621
- Flow rate 6.0 gpm @ 44 psi when used with rough 06300 or 06301

Code Compliance

This unit meets or exceeds the following:

- ASME A112.18.1
- CSA B125.1
- ASSE 1016
- Listed by IAPMO
- Approved for use in Massachusetts

Available Finishes

Chrome	06061000
Oil Rubbed Bronze	06061620
Brushed Nickel	06061820
Polished Nickel	06061830
Rubbed Bronze	06061920

Required Accessories

ThermoBalance I rough	06622000
or	
ThermoBalance I rough with stops	06621000
or	
ThermoBalance I rough with bypass	06300000
or	
ThermoBalance I rough with bypass and stops	06301000

The measurements shown are for reference only.

Products and specifications shown are subject to change without notice.

Specification sheet revised 1/2009

hansgrohe